Patrico

Specification Sheet

SKU: PET01.00LTRCLROPBSIC

1L Clear Round rPET Bottle - 28mm Neck

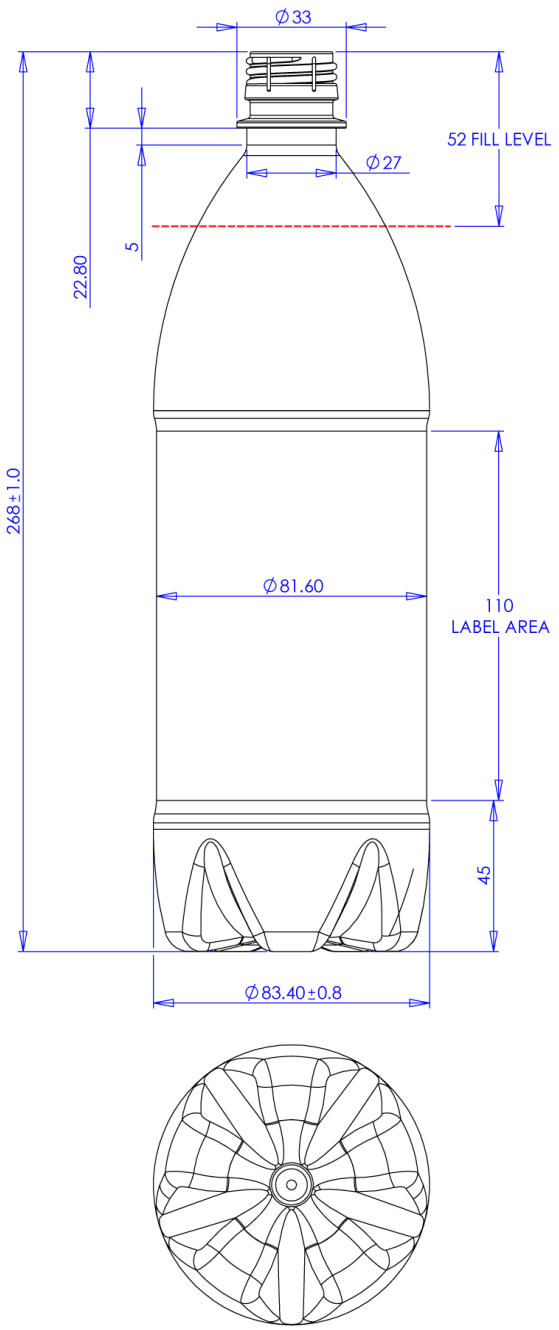

PRODUCT TITLE	1000ml STANDARD
DRAWING NUMBER	E032-B-01 ref PET PLAS drg B0004 iss1
ISSUE NUMBER	1
MATERIAL	rPET

CAPACITY @ FILL LEVEL @ 20°C after 72hrs	1010ml ± 10ml
CAPACITY @ BRIMFULL @20°C after 72hrs	1050ml ± 10ml
NECK FINISH	28mm BPF
DESIGN WEIGHT	34g
ALTERNATIVE WEIGHTS	...
TOOLING REF	B615000

DIMENSIONS

ALL DIMENSIONS IN MILLIMETERS UNLESS OTHERWISE STATED

ALL DIMENSIONS SHOWN ARE A REPRESENTATION AND ARE SUBJECT TO CHANGE

UNLESS STATED GENERAL TOLERANCES FOR BLOWN PARTS = ±0.5 mm

UNLESS STATED GENERAL TOLERANCES FOR INJECTED PARTS = ±0.2mm

THIS DRAWING AND THE COPYRIGHT THEREON ARE THE PROPERTY OF ESTERFORM LTD AND MUST NOT BE REPRODUCED IN PART OR IN WHOLE OR PASSED ON TO OTHERS WITHOUT PERMISSION