Patrico

Specification Sheet

SKU: PET00.500MLCLROPBSIC

500ml Drinks Clear PET Bottle

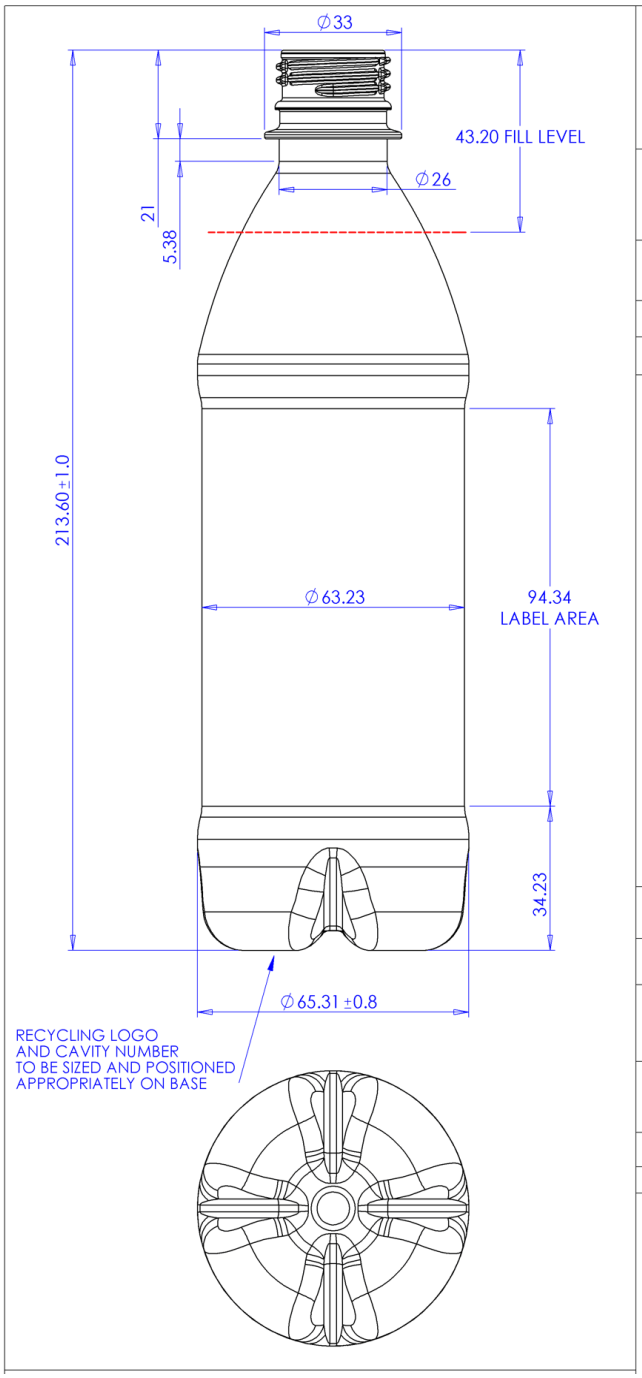

PRODUCT TITLE	**500ml STANDARD (pco)**
DRAWING NUMBER	**E2469-B-01**
ISSUE NUMBER	1
MATERIAL	PET

CAPACITY @ FILL LEVEL @ 20°C after 72hrs	500ml ±5ml
CAPACITY @ BRIMFUL @20°C after 72hrs	...
NECK FINISH	28mm PCO 1810
NECK DRAWING No	...
DESIGN WEIGHT	20.3g
ALTERNATIVE WEIGHTS	24.1g
TOOLING REF	...

DIMENSIONS

ALL DIMENSIONS IN MILLIMETERS UNLESS OTHERWISE STATED

ALL DIMENSIONS SHOWN ARE A REPRESENTATION AND ARE SUBJECT TO CHANGE

UNLESS STATED GENERAL TOLERANCES FOR BLOWN PARTS = ±0.5 mm

UNLESS STATED GENERAL TOLERANCES FOR INJECTED PARTS = ±0.2mm